Articles

Correlation of clinical phenotype with a pericentric inversion of chromosome 9 and genetic counseling

Osman Demirhan, PhD, Ayfer Pazarbasi, PhD, Dilara Suleymanova-Karahan, MD, Nilgun Tanriverdi, PhD, Yurdanur Kilinc, MD.

ABSTRACT

الأهداف: شرح التاريخ المرضي ل 57 حالة تعاني من انقلاب الكروموزوم9 (inv9)، مع تحليل نوع الكروموزوم وتقييم أهمية هذه النتائج.

الطريقة: في هذه الدراسة قمنا بدراسة الحدث، الحالة السريرية الملحوظة والاستشارة الجينية لانقلاب الكروموزوم9 (inv9) و (p11;q12) و(p11;q13) و (p11;q21) للمريضات اللواتي تم تحويلهن إلى مختبرنا من مختلف العيادات لكلية الطب بجامعة كوكوروفا – تركيا، 157 حالة للتحليل الوراثي الخلوي من 15528 الذي تم الحصول عليها في الفترة ما بين مايو 1993م وحتى فبراير2007م.

النتائج: وجدنا أن حدوث انقلاب الكروموزوم9 (inv9) يكون بنسبة 1.01%. من مراجعة 157 حالة لديها انقلاب الكروموزوم9 (inv9)، توصلنا أن الحدث لمجموعة الإجهاض بنسبة 30.6%، وقد بدا هذا مرتفعاً بين المرضى البالغين المصابين بتحول الكروموزوم9 (inv9)، كما تبين أن 17 حالة تعاني من تخلف عقلي، الذي أعطى حدوث بنسبة 10.8%. نذكر هنا تقرير عن نتائج وراثية خلوية وسريرية ل157 حالة مصابة بانقلاب الكروموزوم9 (inv9) والذين يعانون من مشاكل مختلفة.

خاتمة: على الرغم من انقلاب الكروموزوم9 (inv9) كان يعتبر تغير طبيعي، فقد طبقت ملاحظتنا احتمالية الاتحاد بين انقلاب الكروموزوم9 (inv9) والشذوذات. تقترح أن قابلية الموضع لهذه الأنماط الظاهرية قد تكون موجودة عند نقطة الكسر لانقلاب الكروموزوم9 (inv9)، والذي يؤدي إلى استنساخ قابلية الجين للشذوذ غير المحدد. يمكن استعمال هذه النتائج بشكل واسع في الوراثة السريرية وكأداة فعالة في الاستشارة الوراثية والإرشاد التوالدي.

Objectives: To describe the history of 157 carriers of pericentric inversions on chromosome 9 [inv(9)] with karyotype analyses and evaluate the significance of these findings.

Methods: We studied the incidence, clinical significance, and genetic counseling of inv(9) (p11;q12), (p11;q13), and (p11;q21) patients who were referred to our laboratory from various clinics of the Medical Faculty, Cukurova University, Adana, Turkey retrospectively from 157 cases of 15528 cytogenetic analyses collected between May 1993 and February 2007.

Results: We found the incidence of inv(9) to be 1.01%. From a review of 157 cases with inv(9), it is concluded that the incidence of the spontaneous abortion group (30.6%) appeared to be high among the adult patients with inv(9). The 17 cases were found to have mental retardation, which gave an incidence of 10.8%. We here report the clinical and cytogenetic findings of 157 inv(9) cases that had different problems.

Conclusion: Although, inv(9) has been considered to be a normal variant, our observation implies a possible association between inv(9) and abnormalities, suggesting that a susceptibility locus for these phenotypes may be located at the breakpoint of the inversion on chromosome 9, which may lead to cloning of a susceptibility gene for unspecified abnormalities. These findings could be used widely in clinical genetics, and as an effective tool for genetic counseling and reproductive guidance.

Saudi Med J 2008; Vol. 29 (7): 946-951

From the Departments of Medical Biology and Genetics (Demirhan, Pazarbasi, Suleymanova-Karahan, Tanriverdi), and Pediatrics (Kilinc), Faculty of Medicine, Cukurova University, Balcali, Adana, Turkey.

Received 5th February 2008. Accepted 9th June 2008.

Address correspondence and reprint request to: Dr. Ayfer Pazarbasi, Department of Medical Biology and Genetics, Faculty of Medicine, Cukurova University, 01330 Balcali, Adana, Turkey. Tel. +90 (322) 3387068. Fax. +90 (322) 3386572. E-mail: payfer@cu.edu.tr

Pericentric inversion of chromosome 9 [inv(9)] is one of the most common balanced structural chromosomal aberrations, and occurs in approximately 0.8-2% of the normal population.[1] It is important to note that the prevalence of inv(9) in the general population varies with ethnicity. Despite being categorized as a minor chromosomal rearrangement that does not correlate with an abnormal phenotype, many reports have raised conflicting views regarding the association of inv(9) with subfertility, recurrent abortions and other abnormal clinical conditions,[1-5] myotonic dystrophy,[6] bipolar disorder,[7] and schizophrenia.[8-10] Increased heterochromatin polymorphism involving chromosome 9 has been associated with acute leukemia,[11] and ovarian cancer.[5] Hosoda et al[12] reported a case of cerebral cortical dysplasia and inv(9). The recent study of Demirhan et al,[13] reported a frequency of inv(9) as 1.5% in Turkish children with intellectual disability. The pericentric inversions cause not only these changes, but also some patients carrying inversions have an increased risk of unbalanced progeny, ranging from 1-10%.[14] Since a pericentric inversion is an intrastructural rearrangement, there may be a genetic cause for the patient's condition. For this reason, prenatal diagnosis of families of the carriers is actually very important. We describe the history of 157 carriers of inv(9) with karyotype analyses and evaluate the significance of these findings.

Method. A total of 15528 individuals (children, adults, and couples) with different histories, as seen in **Table 1**, who were referred to our genetic laboratory for cytogenetic analysis from various clinics of the Medical Faculty, Cukurova University, Adana, Turkey between May 1993 and February 2007. All subjects were evaluated regarding any genetic causes that might underline these types of disorders. As they were routine patients, a written approval was not obtained from the Ethical Committee of the Cukurova University Hospital and informed consent from all patients. A blood sample was drawn from each subject. The sample from one case was amniotic fluid, and the other one case was cord blood. Karyotyping of peripheral, cord lymphocyte, and amniotic fluid cultures were performed by using G-banding by trypsin Giemsa (GTG) according to standard cytogenetic methods.[15] C-banding was also carried out for the evaluation of pericentric inversion when necessary. Initially, 20 metaphases were examined for all the subjects, then an additional 10 cells were examined in which when at least one abnormal cell was observed.

Statistical analysis for frequencies were carried out using Statistical Package for Social Sciences SPSS version 10.0 software.

Results. The clinical indications seen in the cases with pericentric inversion 9 were listed in **Table 1**. One hundred and fifty-seven of the 15528 subjects had a polymorphic inversion of the 9qh+ region: of which 124, 25, and 8 cases included (p11;q13), (p11;q12) and (p11;q21) inversion of chromosome 9 respectively. The incidence of inv (9) was 1.01%. There were 95 (60.5%) females and 62 (39.5%) males, and 22.3% consanguineous marriage or in our cases. Inv(9) was found in 41 families with spontaneous abortion, 12 of them had serious obstetric history. Three families with children with Down syndrome, and 2 families with a child with isolated malformation were referred for genetic counseling and karyotype analyses. In addition, inv(9) was seen in 2 males with infertility, 4 males with hypogonadism, and 4 females with amenorrhea. There was a Y chromosome in a karyotype of a female with primary amenorrhea who showed the pattern of testicular feminization. In one female, there was only

Table 1 - Clinical indications for genetic counseling in the cases with pericentric inversion.

Clinical diagnosis	Male	Female	Total
Habitual spontaneous abortion	14 (4)	34 (6)	48 (10)†
Poor obstetrical history	4 (1)	11 (3)	15 (4)†
Down syndrome	4 (2)	4 (2)	8 (4)*
Parents of children with Downs syndrome	1	2	3
Children with isolated malformation	2	3 (1)	5 (1)*
The parents of the children with isolated malformations	2	-	2
Mental retardation	7 (4)	8 (3)	15 (7)*
Growth and developmental delay	6 (3)	7 (2)	13 (5)*
Primary amenorrhea	-	4 (1)	4 (1)*
Testicular feminization	-	1	1
Hypogonadism	4	-	4
Dysmorphogenesis	5 (1)	3	8 (1)*
Intersex	1	-	1
Premature menapoz	-	1	1
MPS	1 (1)	-	1 (1)*
Cornelia de Lange syndrome	-	1 (1)	1 (1)*
AASE syndrome	-	1	1
Friedrich ataxia	1	-	1
Neurology	1	1	2
Hematology	6	11	17
Cardiology	1	-	1
Dermatology	-	1	1
Infertility	2	-	2
Children with inv9	-	1‡	1
Turner syndrome	-	1	1
Total	**62**	**95**	**157 (35)**

*parents relative, †consanquineous marriages,
‡determined at amniocentesis, MPS - mucopolysaccharidosis,
AASE - triphalangeal thumb, congenital anemia,
inv9 - pericentric inversions on chromosome 9

one X chromosome named as Turner syndrome. Inv(9) were seen in 8 of the children with Down syndrome, one case of Cornelia de Lange syndrome, one case of triphalangeal thumb, congenital anemia (AASE), one case of mucopolysaccharidosis (MPS), 15 cases of mental retardation, 11 cases of developmental delay, and one case of Friedreich ataxia. There was pericentric inversion in 5 children with isolated malformations and 8 cases with dysmorphogenesis. Twenty children were hospitalized in different departments (15 cases in hematology-oncology, 3 in neurology, one in cardiology, and one in dermatology). In one family, inv(9) was seen in a child with isolated malformation and in his mother. The child was born at the first pregnancy. On 32nd week of gestation, the malformation could not be recognized by ultrasonographic examination. She had undeveloped right hand fingers, and her hand was hypoplastic, with metacarpal and proximal phalangeal agenesis (**Figure 1a-c**). The second case was a female with dysmorphogenesis who was born at the fifth pregnancy and parents were not relatives (**Figures 2a & b**). Three male children and one female child in this family were healthy. After the diagnosis of inv(9), the parents declared that they will not have another baby in the future and they regretted to be examined for chromosomal analyses. In 9 out of 34 cases who carried inv(9) and spontaneous abortion had marriages with relatives and one had a multi-relative marriage. Four out of 15 cases with serious obstetrical history were married to relatives, and 2 of them had multi-relative marriages. The parents were relatives in 7 out of 15 children with mental retardation, and in 5 children out of 13 with growth retardation. The karyotypes of the parents of 9 children with genetic problems and the status of inversion carriers were evaluated, and in 5; 2 parents had a child with Down syndrome, one parent had a child with isolated malformation, one parent had a child with growth retardation, and one parent had a

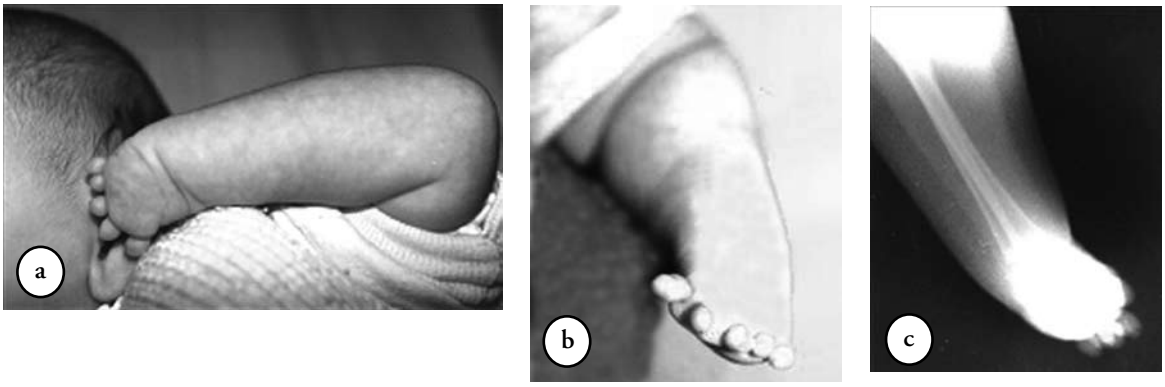

Figure 1 - Phenotype. **a**) Undeveloped fingers, **b**) right hand with hypoplastic, metacarpal, and proximal phalangeal agenesis, and **c**) radiogram of the right hand.

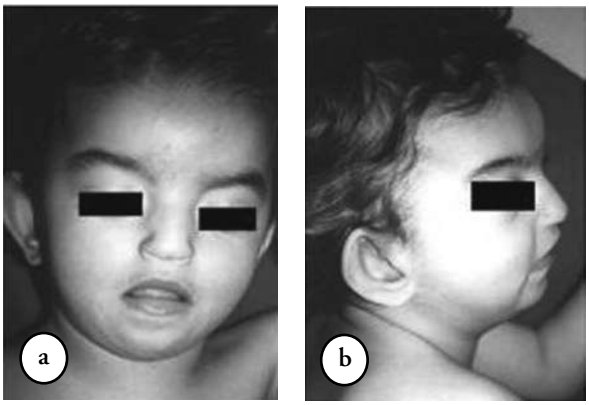

Figure 2 - The atypical face in a girl who has dysmorphogenesis. **a**) The frontal appearance, and **b**) profile of her face.

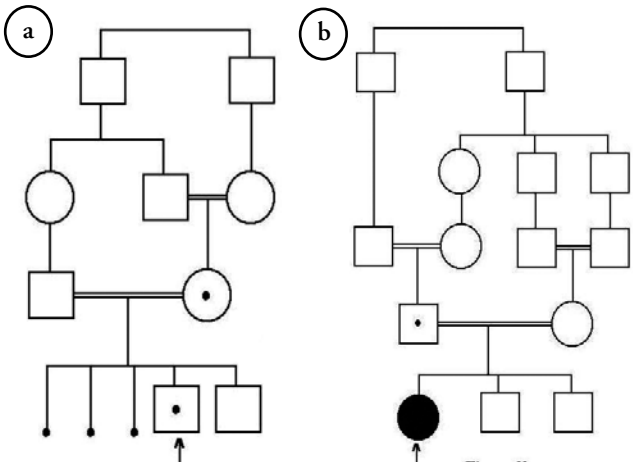

Figure 3 - Pedigrees of the **a**) family I and **b**) family II.

child with mental retardation. These inversions were inherited from mother or father (heredofamilial). Out of 157 cases, 22.3% had consanguineous marriages. In **Figure 3**, examples of 2 of the pedigrees are shown. In the first pedigree, the karyotype of the child with growth retardation was investigated, parents and youngest child were also screened for chromosomal analyses. The inv(9) was observed in the mother of the child who was born at the 4th pregnancy. The father and the siblings had normal karyotypes. There was multi-relativity in the family (**Figure 3a**). In the second pedigree, a female child with mental retardation had inherited pericentric inversion from her father. There was also multi-relativity in this family (**Figure 3b**). The brothers of the proband were not examined for karyotyping because of healthy appearance. The pedigrees were drawn for each family. Genetic counseling has been given in the families with habitual spontaneous abortion, serious obstetrical history, and having a child with malformation or syndrome.

Discussion. The inv(9) is one of the most common balanced structural chromosomal aberrations.[1] Serra et al,[16] estimated the prevalence of inv(9) as 0.85% in Europeans.[16] Ko et al,[17] reported a frequency of 1.2% in Taiwanese fetuses. In Japan, the incidence was 1.65% among normal newborns.[18] We also examined 15528 individuals and reported the prevalence of inv(9) as 1.01% in the Turkish population. The inv(9) has generally been considered to be a normal variant rather than an abnormal karyotype.[19] However, many reports in the recent literature raised conflicting views regarding its association with infertility, recurrent abortions, schizophrenia, and other abnormal clinical conditions, as well as chromosomal abnormalities arising as a result of having inv(9).[1,3,5,11,18,20-22] The clinical findings of the subjects with pericentric inversion vary from the cases without phenotypic manifestations to the patients with dysmorphogenesis, severe mental retardation, and malformations. During evaluation, it is difficult to decide if the inversion is a chromosomal abnormality or a polymorphic variant of the chromosome. For years, geneticists have searched for the answer to this question. Which is the major polymorphic abnormality that causes genetic problems?

We identified acquired inversions of the heterochromatic region of inv(9) (p11;q12), (p11;q13), and (p11;21)] in 157 children and in couples with a history of abnormal clinical findings. Based on these and the previously reported patients with an acquired inv(9), there is little correlation between clinical presentation and the acquired inv(9). Because the breakpoints are in repetitive sequences involved in the common inv(9), these chromosomes are considered clinically insignificant.[23] Molecular cytogenetic studies of inv(9) breakpoints suggested that there are homologous sequences at the breakpoints of the inversion at 9p11--p12 and 9q13--q21.1. Such homologous sequences may be involved in the mechanisms generating the inversion.[23] Disruption of a gene by its breakpoints or translocation of one genetic region to another is a well-established mechanism leading to clinical findings, so the breakpoints may potentially be involved in the pathogenesis of the disorders. The potential mechanisms generating acquired inv(9) may vary and could account for the variation in clinical presentations.[21]

Approximately 50-70% of all sporadic miscarriages are caused by a chromosomal abnormality. In the present study, the frequency of inv(9) (as the most common chromosomal abnormality) is increased in the people with habitual spontaneous abortion [30.6% of 157 inv(9)] (**Table 1**). This high value indicated that parental inversion is easily transmitted to their offspring. Previous literature has described no increased incidence of fetal wastage for couples in which one partner carries a smaller inversion.[24] Small inversions may lead to recombination with lethal deletions or addition of large fragments. It is presumed that the women could have some undetected miscarriages in early pregnancy. The karyotypes of 639 Japanese couples with the history of habitual spontaneous aborts were investigated and there was inv(9) as a major variant in 15 cases.[25] Participation of genetically unbalanced gametes in the process of fertilization is a well-recognized cause of spontaneous abortions. The imbalance may be familial as in our cases, or may arise de novo and can be detected by cytogenetic studies of the aborts. The contribution of chromosomal abnormalities to fetal loss decreases as pregnancy continues. Chromosomal abnormalities are responsible for only 5% of stillbirths.[26] Thus, cytogenetic analysis of the aborts, particularly cases of recurrent abortion are of great help to reach an etiological diagnosis. The pericentric inversion was seen more frequently in infertile families. An increasing number of investigators have shown an increased incidence of "sub-fertility" in adult carriers of inv(9).[1] We also found the inv(9) to be the most frequent (6.7%) including 2 infertile males, 4 females with primary amenorrhea, a female with testicular feminization, and 4 males with hypogonadism. Inv(9) (p24q13) has been reported in 3 sterile brothers in one study.[27] In another study, fertility problems in a man with karyotype 46,XY, inv(2) (p11q13), inv(9) (p11q13) was also reported.[28] Kiss and Osztovics[29] found inv(9) in 1.9% of dysmorphic children.[29] We have also significantly detected the dysmorphic children (13 cases) with inv(9). These data support that this inversion, previously regarded as a polymorphism or normal variant, may play an important role in the etiology of unspecified dysmorphic syndromes.

In previous studies, inv(9) was reported in 2 cases of cerebral cortical dysplasia and cerebral cyst.[4,12] Some studies have indicated an increased prevalence

of inv(9) in schizophrenia.[3,9,13] Kunugi et al[3] reported that the incidence of inv(9) in Japanese schizophrenia was significantly higher than the general population (1.7%).[3] Axelsson and Wahlstrom reported an unusually increased prevalence (9.7%) of inv(9) among male patients with paranoid psychosis.[30] The patients with inv(9) and monogenic syndromes were also reported, Soto's syndrome, Friedreich ataxia, and ectodermal dysplasia.[31-33] We also found the inv(9) in a child with Friedreich ataxia. The recent study of Demirhan et al,[13] reported a frequency of inv(9) as 1.5% in Turkish children with intellectual disability.[13] We found that the inv(9) is the second most frequently seen chromosomal abnormality (9.55%) in children with mental retardation. With the available data, it is unclear whether this unusual variant of chromosome 9 is causally related to the mental retardation. Inv(9) may also be associated with mental illnesses including schizophrenia.[3] The present findings and the review of the literature indicated that the inv(9) may be one of the potential regions of interest regarding the etiology of neuropsychiatric disorders.

Increased heterochromatin polymorphism involving chromosome 9 has been associated with acute myelocytic leukemia and acute lymphoblastic leukemia.[34] There are few reports of acute leukemia in these individuals. Recently, Wan et al[35] reported a patient with thrombocythemia and an acquired inv(9) (p11q13). We also observed the inv(9) as the most frequently observed chromosomal abnormality in children with hematological diseases. Disruption of a gene at the breakpoints or translocation of one genetic region to another is a well-established mechanism leading to neoplasia.[21] The proximal short arm of chromosome 9 has been implicated in several malignant disorders.[36] Therefore, the breakpoints may potentially be involved in the pathogenesis of the disorders. Changes in chromatin structure and decreases or increases in methylation have also been associated with hematological malignancies.[37] Further studies are required to confirm our findings.

The pericentric inversion was frequently seen in the families with Down syndrome. Serra et al[16] observed an increased risk of progeny with Down syndrome in carriers of inv(9) that contains an additionally enlarged heterochromatin region. However, the presence of heteromorphism in a normal carrier may increase the risk for a chromosomally abnormal offspring. The investigators concluded that the inv(9) has increased the risk of Down syndrome in fetuses. In our study, we have seen pericentric inversion in Cornellia de Lange syndrome and AASE syndrome with unknown insignificant inheritance. On the other hand, Friedreich Ataxia and MPS patients had autosomal recessive inheritance. In addition to this, there was monosomy of the X chromosome and a pericentric inversion in one patient. There is a considerable risk of chromosomal imbalance for children of the parents with pericentric inversion. The people who were referred for genetic counseling share similar peculiarities like marriages between relatives. **Table 1** shows the cases of genetic counseling with the history of consanguineous marriages or the cases with genetic problems, or relativity of the parents. In the present study, the frequency of the families with consanguineous marriages appeared to be high among the cases with inv(9). In classical genetic textbooks, the genetic load of the families with consanguineous marriages carries much more risks of habitual spontaneous abortions, stillbirths, prenatal losses, neonatal deaths, malformed fetuses, and mental retardation than the normal population.[38] If pericentric inversion is found in a woman, the risk of having a fetus with malformation will be 9%, the risk of spontaneous abortions for this woman is 25%. If pericentric inversion found in a man, the risk of having a fetus with malformation will be 5%, and the risk of spontaneous abortions for this man is 15%.[39] Total risk in this family is 30-50%. There were the same kind of reports from the populations with a history of consanguineous marriages and these results were reconfirmed.[40-42] As a result, prenatal diagnostic tools must be applied to the families with pericentric inversions, if they prefer to have a child.[43,44]

In conclusion, prenatal diagnosis may prevent having a child with Down syndrome. It could be advised to have prenatal diagnosis in future pregnancies in mothers who had a child with chromosomal abnormalities.

Acknowledgment. *This study was performed in Balcali Hospital, Adana, Turkey and supported by Health Societies (SSK, Bagkur, Emekli Sandigi).*

References

1. Teo SH, Tan M, Knight L, Yeo SH, Ng I. Pericentric inversion 9 incidence and clinical significance. ***Ann Acad Med Singapore*** 1995; 24: 302-304.
2. Daya S. Issues in the etiology of recurrent spontaneous abortion. ***Curr Opin Obstet Gynecol*** 1994; 6: 153-159.
3. Kunugi H, Lee KB, Nanko S. Cytogenetic findings in 250 schizophrenics: evidence confirming an excess of the X chromosome aneuploidies and pericentric inversion of chromosome 9. ***Schizophr Res*** 1999; 40: 43-47.
4. Miyaoka T, Seno H, Itoga M, Ishino H. A case of small cerebral cyst and pericentric inversion of chromosome 9 that developed schizophrenia-like psychosis. ***Psychiatry Clin Neurosci*** 1995; 53: 599-602.
5. Yasuhara T, Okamoto A, Kitagawa T, Nikaido T, Yoshimura T, Yanaihara N, et al. FGF7-like gene is associated with pericentric inversion of chromosome 9, and FGF7 is involved in the development of ovarian cancer. ***Int J Oncol*** 2005; 26: 1209-1216.
6. Miyazaki M, Hashimoto T, Tayama M, Kuroda Y, Ueta T. Congenital myotonic dystrophy associated with a chromosome pericentric inversion. ***Neuropediatrics*** 1991; 22: 181-183.

7. McCandless F, Jones I, Harper K, Craddock N. Intrafamilial association of pericentric inversion of chromosome 9, inv(9)(p11-q21), and rapid cycling bipolar disorder. ***Psychiatr Genet*** 1998; 8: 259-262.
8. Nanko S. Schizophrenia with pericentric inversion of chromosome 9: a case report. ***Jpn J Psychiatry Neurol*** 1993; 47: 47-49.
9. Toyota T, Shimizu H, Yamada K, Yoshitsugu K, Meerabux J, Hattori E, et al. Karyotype analysis of 161 unrelated schizophrenics: no increased rates of X chromosome mosaicism or inv(9), using ethnically matched and age-stratified controls. ***Schizophr Res*** 2001; 52: 171-179.
10. Demirhan O, Tastemir D. Chromosome aberrations in a schizophrenia population. ***Schizophr Res*** 2003; 65: 1-7.
11. Keung YK, Knovich MA, Powell BL, Buss DH, Pettenati M. Constitutional pericentric inversion of chromosome 9 and acute leukemia. ***Cancer Genet Cytogenet*** 2003; 145: 82-85.
12. Hosoda Y, Sano A, Kakimoto Y. A case with cerebral cortical dysplasia and pericentric inversion of chromosome 6. ***Japn J Clin Psychiatry*** 1996; 25: 79-82.
13. Demirhan O, Tastemir D, Diler RS, Fırat S, Avci A. A Cytogenetic Study in 120 Turkish Children with Intellectual Disability and Characteristics of Fragile X Syndrome. ***Yonsei Med J*** 2003; 44: 583-592.
14. Gardner RJM, Sutherland GR. Chromosome abnormalities and genetic counseling. 2nd ed. New York (NY): Oxford University Press; 1996. p. 228.
15. Kohler A. Chromosome staining. In: Wegner RD, editor. Diagnostic Cytogenetics. Berlin (Germany): Springer-Verlag; 1999. p. 56-60.
16. Serra A, Brahe C, Millington WA, Neri G, Tedeschi B, Tassone F, et al. Pericentric inversion of chromosome 9: prevalence in 300 Down syndrome families and molecular studies of nondisjunction. ***Am J Med Genet*** 1990; 7 Supp l: 162-168.
17. Ko TM, Hsieh FJ, Chang LS, Pan MF, Lee TY. Pericentric inversions of chromosome 9 in Taiwanese fetuses. ***J Formos Med Assoc*** 1992; 91: 473-474.
18. Yamada K. Population studies of inv(9) chromosomes in 4300 Japanese: incidence, sex difference and clinical significance. ***Jpn J Hum Genet*** 1992; 37: 293-301.
19. Gardner RJM, Sutherland GR. Chromosome abnormalities and genetic counseling. ***Oxf Monogr Med Genet*** 1992; 29: 139-152.
20. Parmar RC, Sira P. Prenatal diagnosis of partial trisomy 21 associated with maternal balanced translocation 46,XX der 21 t(21q;22q) with pericentric inversion of chromosome 9. ***J Postgrad Med*** 2003; 49: 154-156.
21. Betz JL, Behairy AS, Rabionet P, Tirtorahardjo B, Moore MW, Cotter PhD. Acquired inv(9): what is its significance? ***Cancer Genet Cytogenet*** 2005; 160: 76-78.
22. Goumy C, Mihaescu M, Tchirkov A, Giollant M, Bonnet-Dupeyron MN, Jaffray JY, et al. An unusual familial chromosome 9 "variant" with variable phenotype: characterization by CGH analysis. ***Morphologie*** 2005; 89: 71-75.
23. Starke H, Seidel J, Henn W, Reichardt S, Volleth M, Stumm M, et al. Homologous sequences at human chromosome 9 bands p12 and q13-21.1 are involved in different patterns of pericentric rearrangements. ***Eur J Hum Genet*** 2002; 10: 790-800.
24. Imai A, Tamaya T. Chromosome abnormalities associated with recurrent abortion. ***Res Commun Mol Pathol Pharmacol*** 1996; 94: 323-326.
25. Makino T, Tabuchi T, Nakada K, Iwasaki K, Tamura S, Iizuka R. Chromosomal analysis in Japanese couples with repeated spontaneous abortions. ***Int S Fertil*** 1990; 35: 266-270.
26. Daniely M, Aviram-Goldring A, Barkai G, Goldman B. Detection of chromosomal aberration in fetuses arising from recurrent spontaneous abortion by comparative genomic hybridization. ***Hum Reprod*** 1998; 13: 805-809.
27. Davalos IP, Rivas F, Ramos AL, Galaviz C, Sandoval L, Rivera H. Inv(9)(p24q13) in three sterile brothers. ***Ann Genet*** 2000: 43: 51-54.
28. Srebniak M, Wawrzkiewicz A, Wiczkowski A, Kazmierczak W, Olejek A. Subfertile couple with inv(2), inv(9) and 16qh+. ***J Appl Genet*** 2004; 45: 477-479.
29. Kiss P, Osztovics M. Cytogenetic investigations in 817 dysmorphic babies. ***Z Gesamte Inn Med*** 1981; 36: 356-360.
30. Axelsson R, Wahlstrom J. Chromosome aberrations in patients with paranoid psychosis. ***Hereditas*** 1984; 100: 29-31.
31. Haeusler G, Guchev Z, Kohler I, Schober E, Haas O, Frisch H. Constitutional chromosome anomalies in patients with cerebral gigantism (Sotos syndrome). ***Klin Pediatr*** 1993; 205: 351-353.
32. Raimondi E, Bernasconi P, Moralli D, Fujita R, Uziel G, Di Donato S, et al. Localization of DNA probes tightly linked to the Friedreich's ataxia locus b in situ hybridization in a case of pericentric inversion of chromosome 9. ***Hum Genet*** 1991; 86: 525-528.
33. Fuenmayor HM, Roldan PL, Bermudez H. Ectodermal dysplasia in females and inversion of chromosome 9. ***J Med Genet*** 1991; 183: 214-217.
34. Petkovic I, Nakic M, Konja J. Heterochromatic variability in children with acute lymphoblastic leukemia. ***Cancer Genet Cytogenet*** 1991; 54: 67-69.
35. Wan TSK, Ma SK, Chan LC. Acquired pericentric inversion of chromosome 9 in essential throbocythemia. ***Hum Genet*** 2000; 106: 669-670.
36. Pellet P, Hillion J, Carroll AJ, Crist WM, Brouet JC, Tsapis A. Heterogeneity of the breakpoint localization in malignant cells with a 9p11 chromosomal abnormality. ***Leukemia*** 1991; 5: 468-472.
37. Lehmann U, Brakensiek K, Kreipe H. Role of epigenetic changes in hematological malignancies. ***Ann Hematol*** 2004; 83: 137-152.
38. Stevenson OMW, Davison BCC. Consanguineous marriages. In: Carruth A, Davison BCC, Stevenson OMW. Genetic Counseling. London: William Heinemann Medical Books Limited; 1970. p. 168-171.
39. Kozlova SI, Semanova E, Demikova NS, Blinnikova OE. Hereditary syndromes and medical-genetic consultation: Reference book. Leningrad (Russia): Meditsina; 1987. p. 281.
40. Jain VK, Nalini P, Chandra R, Srinivasan S. Congenial malformations, reproductive wastage and consanguineous mating. ***Aust N Z J Obstet Gynaecol*** 1993; 33: 33-36.
41. Basaran N, Hassa H, Basaran A, Artan S, Stevenson JD, Sayli BS. The effect of consanguinity on the reproductive wastage in the Turkish population. ***Clin Genet*** 1990; 37: 415.
42. Imaizunu Y. A recent survey of consanguineous marriages in Japan. Religion and socioeconomic class effects. ***Ann Hum Biol*** 1986; 13: 317-330.
43. Salihu M, Boos R, Tchuinguem G, Schmidt W. Prenatal diagnosis of translocation and a single pericentric inversion 9: the value of fetal ultrasound. ***J Obstet Gynaecol*** 2001; 21: 474-477.
44. Vargas MT, Fernandez MC, Salas E, Novales MA. Pericentric inversion of chromosome 9. Summary of the author's results. ***An Esp Pediatr*** 1990; 33: 442-449.